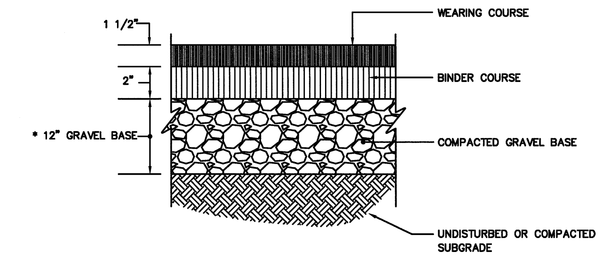

* GRAVEL BASE VARIES, SEE PLAN C2.1.

1 BITUMINOUS CONCRETE
N.T.S.

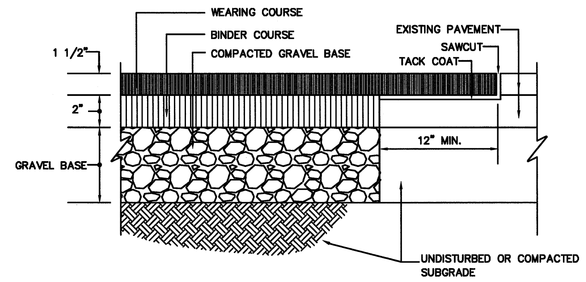

NOTE: ALL TRENCHES IN WAYSIDE ROAD SHALL HAVE THE PAVEMENT TREATED AND RESTORED BY EITHER TRENCH "GRIND & INLAY" OR INFRA-RED SURFACE TREATMENT ONE YEAR AFTER INITIAL PAVING

2 BITUMINOUS CONCRETE AT EXISTING PAVEMENT
N.T.S.

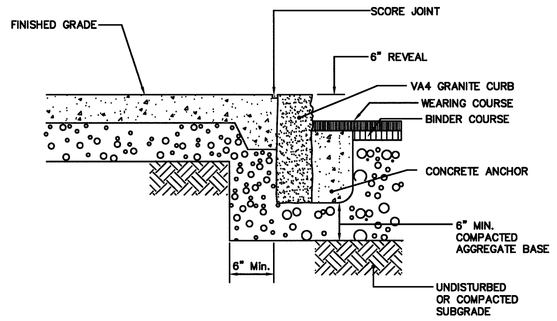

3 VERTICAL GRANITE CURBING
N.T.S.

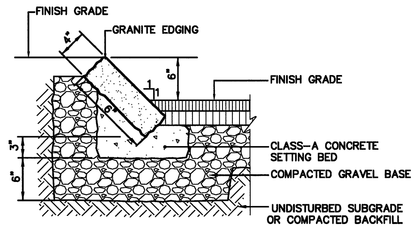

4 SLOPED GRANITE EDGING
N.T.S.

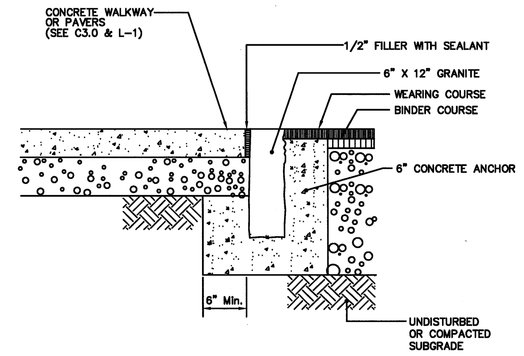

5 FLUSH VERTICAL GRANITE
N.T.S.

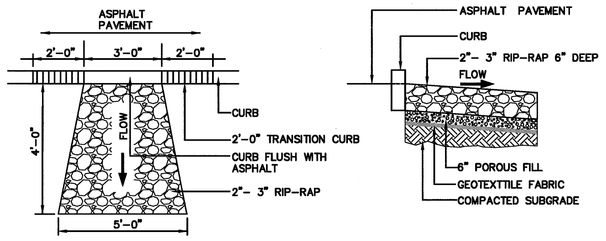

6 CURB OPENING
N.T.S.

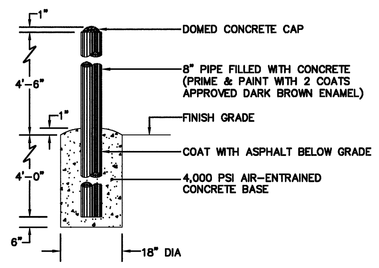

7 STEEL BOLLARD
N.T.S.

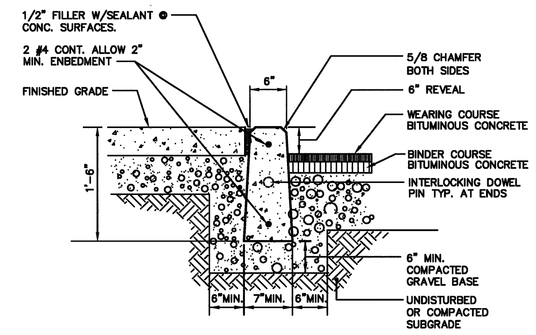

8 PRECAST CONCRETE CURB
N.T.S.

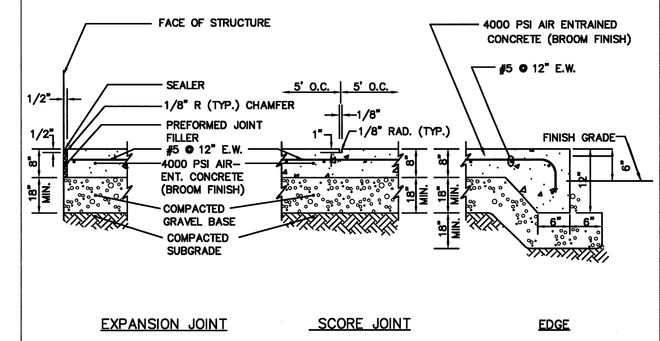

9 EQUIPMENT AND LOADING DOCK
N.T.S.

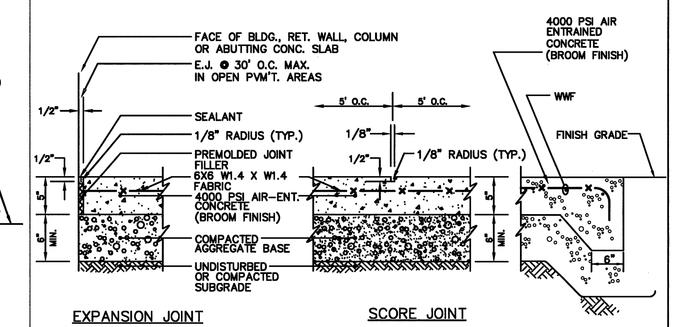

1. MAXIMUM CROSS SLOPE = 2%
2. MAXIMUM GRADIENT = 5%
3. PROVIDE EXPANSION JOINT AT FACE OF ABUTTING SLABS AND STRUCTURES.
4. PROVIDE VERTICAL GRANITE OR PRECAST CONCRETE CURBING PER SHEET C3.

10 CONCRETE WALKWAY
N.T.S.

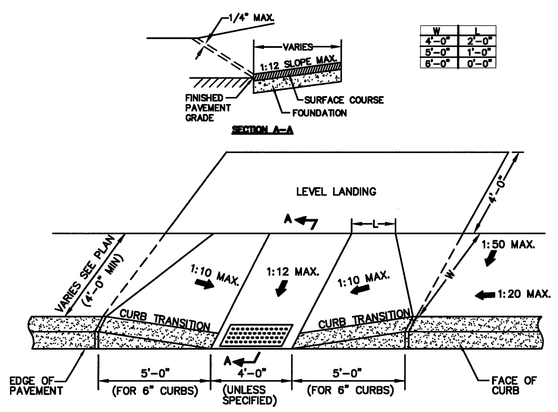

11 ACCESSIBLE CURB CUT (TYPE 1)
N.T.S.

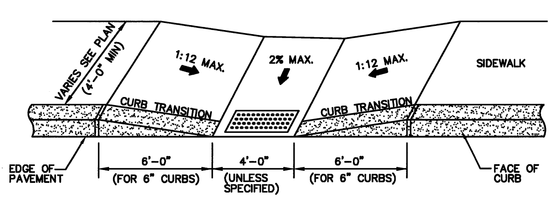

12 ACCESSIBLE CURB CUT (TYPE 2)
N.T.S.

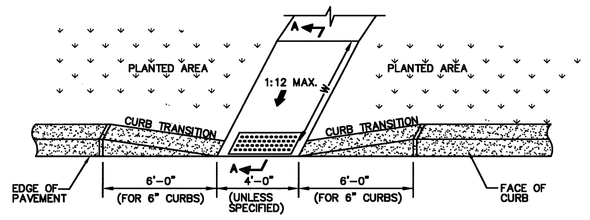

13 ACCESSIBLE CURB CUT (TYPE 3)
N.T.S.

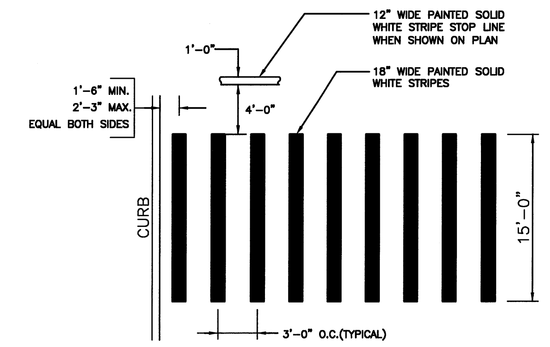

14 CROSSWALK
N.T.S.

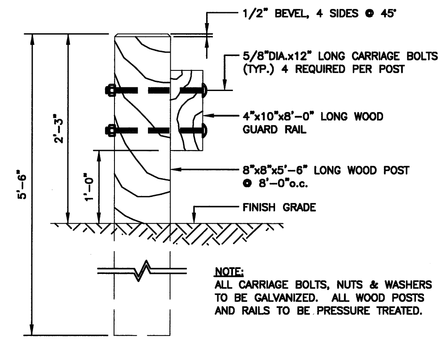

NOTE:
ALL CARRIAGE BOLTS, NUTS & WASHERS TO BE GALVANIZED. ALL WOOD POSTS AND RAILS TO BE PRESSURE TREATED.

15 WOOD GUARD RAIL
N.T.S.

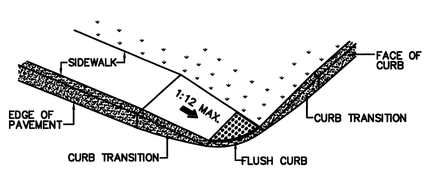

16 ACCESSIBLE CURB CUT (TYPE 4)
N.T.S.

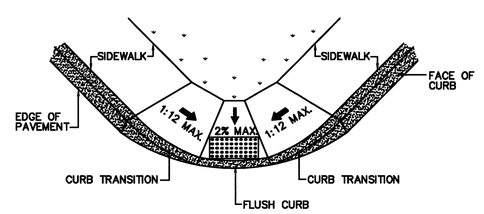

17 ACCESSIBLE CURB CUT (TYPE 5)
N.T.S.

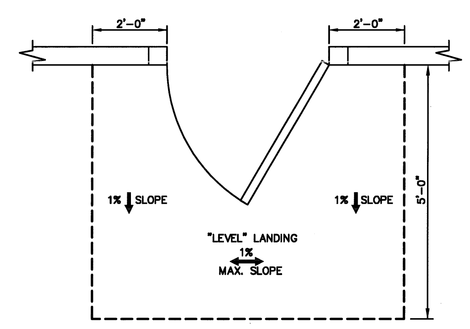

18 LEVEL LANDING AT BUILDING ENTRANCES
N.T.S.

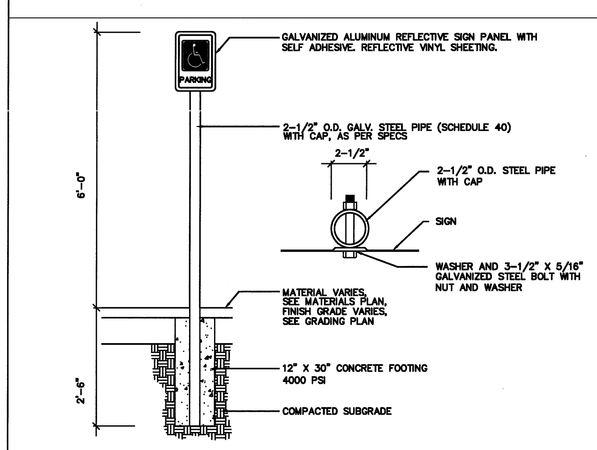

19 PARKING SIGN
N.T.S.

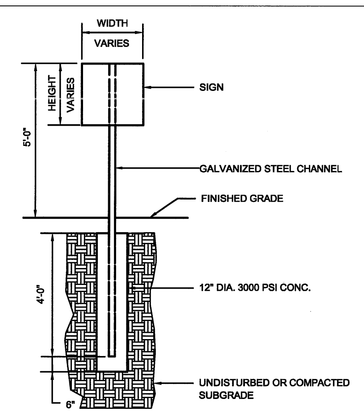

20 TRAFFIC SIGN
N.T.S.

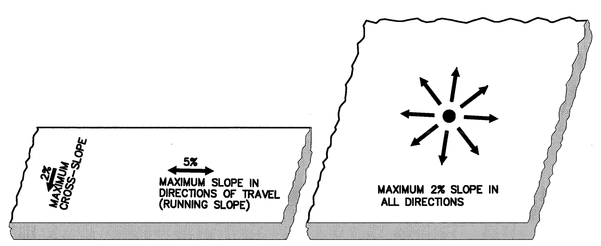

21 PAVEMENT SLOPES
N.T.S.

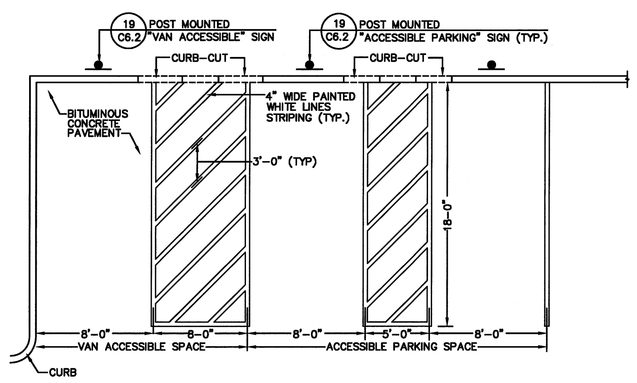

22 ACCESSIBLE PARKING SPACES
N.T.S.

NOTES:

ACCESSIBLE PARKING SPACES:
1. MAXIMUM SLOPE 2% IN ANY DIRECTION.
2. LOCATE SIGN WITHIN 10' OF ACCESSIBLE SPACE.
3. PROVIDE AN ACCESSIBLE CURB CUT AT EACH ACCESS AISLE BETWEEN ACCESSIBLE SPACES.

SIDEWALKS AND PLAZAS:
1. SLOPE REQUIREMENTS APPLY TO ALL WALKWAY SURFACES INCLUDING BITUMINOUS, PORTLAND CEMENT, PAVERS AND CHIPSEAL.
2. SLOPE REQUIREMENTS APPLY TO ALL SIDEWALKS AND PLAZAS AND ARE NOT LIMITED TO ACCESSIBLE ROUTES.
3. PROVIDE A 5' LEVEL LANDING AT ALL BUILDING DOORWAYS.
4. IN THE EVENT OF DISCREPANCY BETWEEN THE MAXIMUM ACCESSIBLE CROSS SLOPE OR RUNNING SLOPE PER THE DETAILS AND THE GRADING SHOWN ON THE DRAWINGS, NOTIFY THE ARCHITECT PRIOR TO CONSTRUCTING THE PAVEMENT.

CURB CUTS:
1. PROVIDE FLUSH TRANSITION FROM CURB CUTS TO ADJACENT WALKS AND STREETS, FREE OF CHANGES IN LEVEL GREATER THAN 1/2-INCH.
2. THE SLOPE OF THE LEVEL LANDING AT THE TOP OF THE CURB CUT SHALL NOT EXCEED 2% IN ANY DIRECTION.
3. PROVIDE DETECTABLE WARNING ALONG THE FULL DEPTH AND WIDTH OF THE CURB RAMP.

SMMA
SYMMES MAINI & MCKEE ASSOCIATES
1000 Massachusetts Avenue
Cambridge, Massachusetts 02138
617.547.5400 Fax 617.354.5758

KLING STUBBINS

OWNER REVIEW

NAME	DATE

NO.	DATE	DESCRIPTION
1	12/18/09	B200 SPECIAL PERMIT

ISSUE LOG
△ = CLOUDED CHANGE

PATRIOT PARTNERS

Lexington TECHNOLOGY PARK
200 Patriot Way
Lexington, Massachusetts

DETAILS II

SCALE	NTS
DRAWN BY	EF
CHECKED BY	
PROJ. ARCH. / ENGR.	JCH
PROJ. MGR.	BWL
JOB NO.	07044.00

© SYMMES, MAINI & MCKEE ASSOCIATES, INC. 2007

C6.2