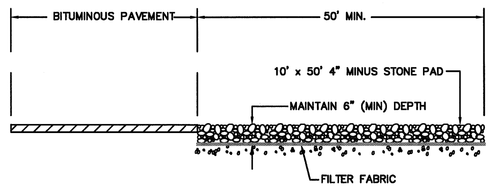

1 TEMPORARY CONSTRUCTION ENTRANCE
N.T.S.

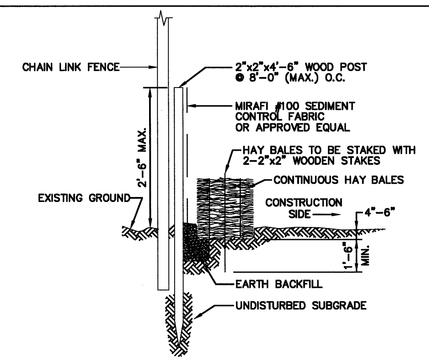

2 HAYBALES W/SILT FENCE
N.T.S.

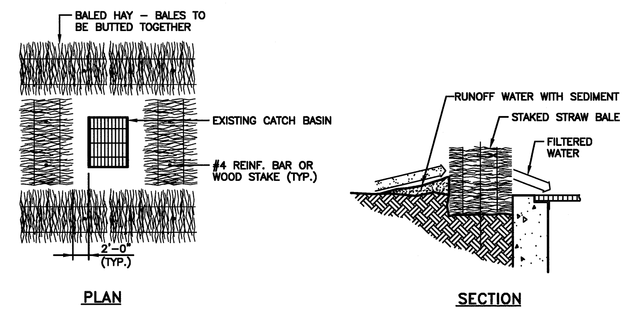

3 HAYBALE FILTER AT CATCH BASIN
N.T.S.

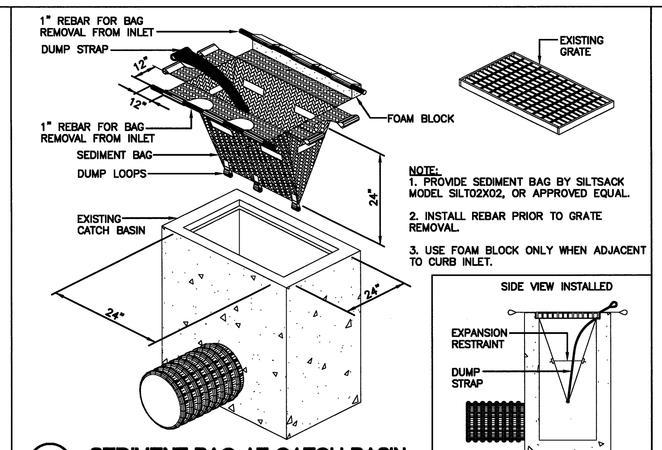

4 SEDIMENT BAG AT CATCH BASIN
N.T.S.

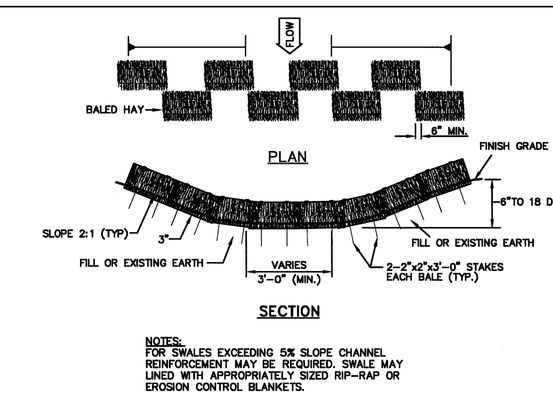

NOTES:
FOR SWALES EXCEEDING 5% SLOPE CHANNEL REINFORCEMENT MAY BE REQUIRED. SWALE MAY LINED WITH APPROPRIATELY SIZED RIP-RAP OR EROSION CONTROL BLANKETS.

6 TEMPORARY DRAINAGE SWALE WITH HAYBALE EROSION CHECK DAM
N.T.S.

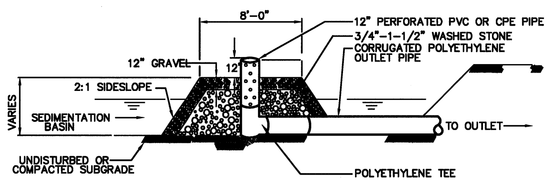

6 TEMPORARY OUTLET STRUCTURE
N.T.S.

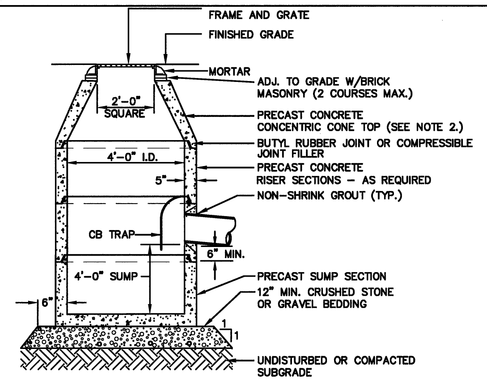

NOTES: 1. STRUCTURE ADEQUATE FOR H-20 LOADING.
2. PROVIDE SLAB TOP WHERE PIPE COVER ≤ 48".

7 PRECAST CONCRETE CATCHBASIN
N.T.S.

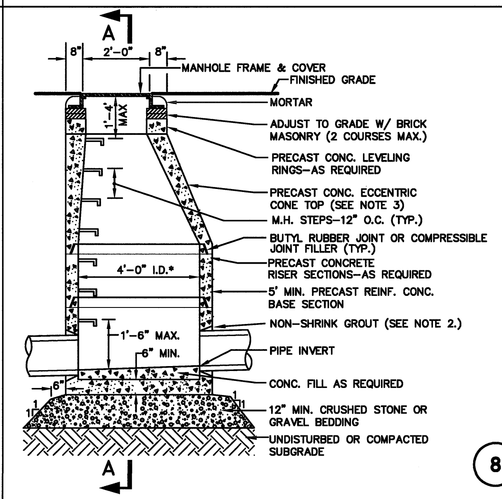

NOTE: 1. STRUCTURE ADEQUATE FOR H-20 LOADING.
2. NEOPRENE SEAL TO CONFORM TO ASTM C-443 (SANITARY M.H. ONLY.)
3. PROVIDE SLAB TOP WHERE REQUIRED.

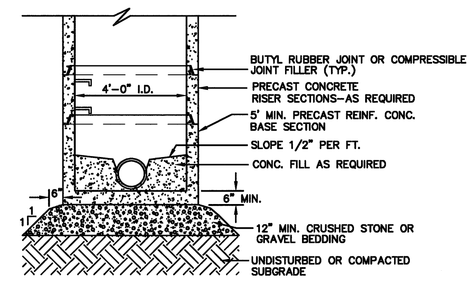

SECTION A

* PROVIDE 5'-0" I.D. SECTIONS AS REQUIRED FOR MULTIPLE/LARGE DIAMETER PIPES.

8 PRECAST CONCRETE DRAIN MANHOLE
N.T.S.

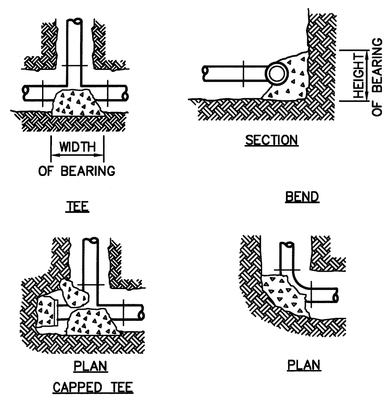

MINIMUM BEARING AREA (SQUARE FEET)							
FITTINGS	BENDS				CAPS & TEES	VALVES	REDUC.
PIPE SZ.	90°	45°	22-1/2"	11-1/4"			
6"	4	2	2	2	3	3	3
8"	6	3	3	3	5	5	5

NOTE:
1. WIDTH & HEIGHT OF BEARING AREAS SHALL BE APPROX. THE SAME.
2. BEARING SHALL BE ON UNDISTURBED SOIL

11 THRUST BLOCKS - FORCE MAIN
N.T.S.

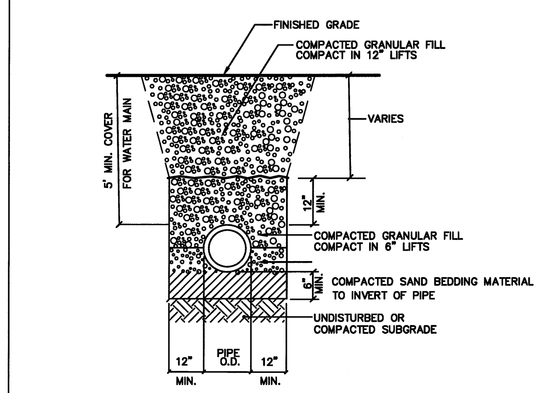

12 TRENCH SECTION - UTILITY PIPE
N.T.S.

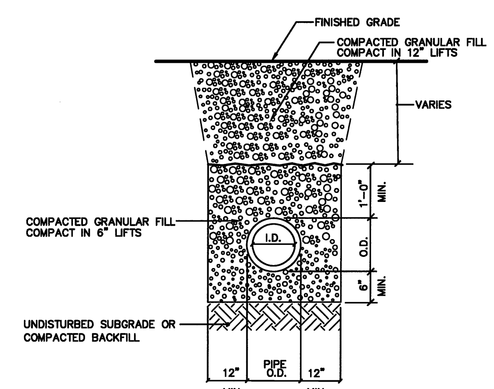

13 TRENCH SECTION - CPE DRAINS
N.T.S.

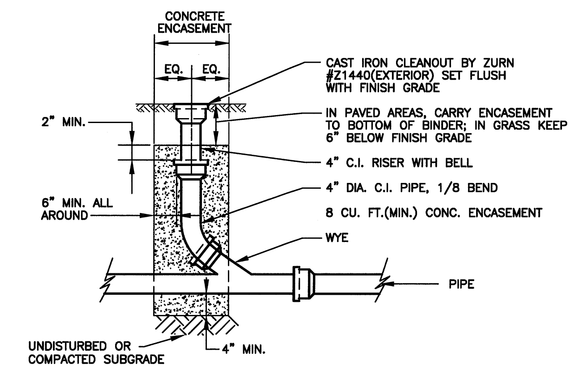

14 CLEANOUT
N.T.S.

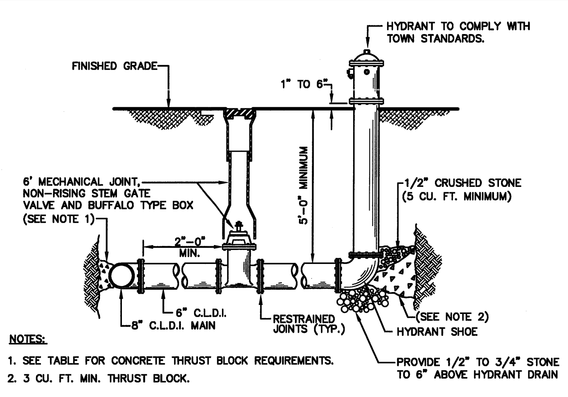

NOTES:
1. SEE TABLE FOR CONCRETE THRUST BLOCK REQUIREMENTS.
2. 3 CU. FT. MIN. THRUST BLOCK.

15 HYDRANT
N.T.S.

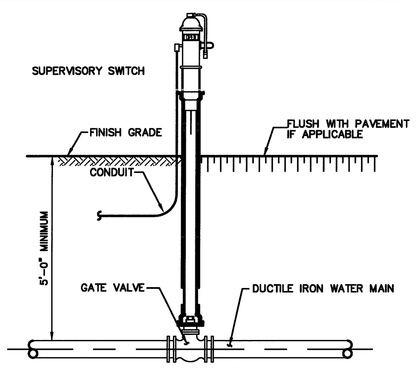

16 POST INDICATOR VALVE
N.T.S.

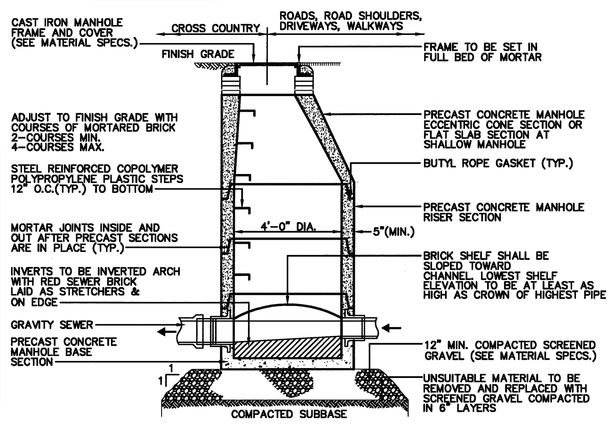

17 TYPICAL SEWER MANHOLE
N.T.S.

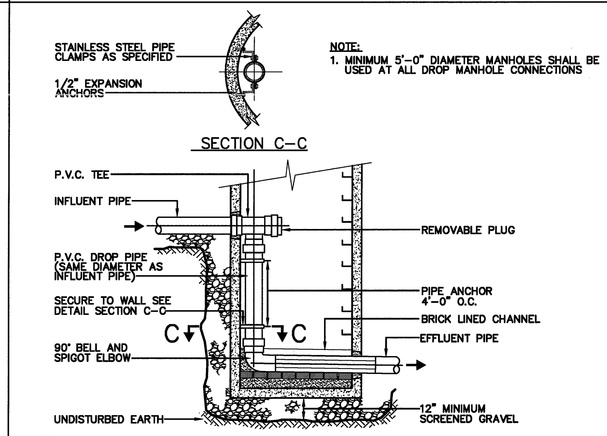

18 P.V.C. SEWER DROP CONNECTION (INTERNAL)
N.T.S.

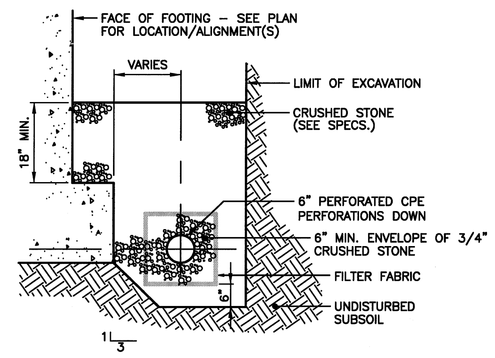

19 FOUNDATION DRAIN
N.T.S.

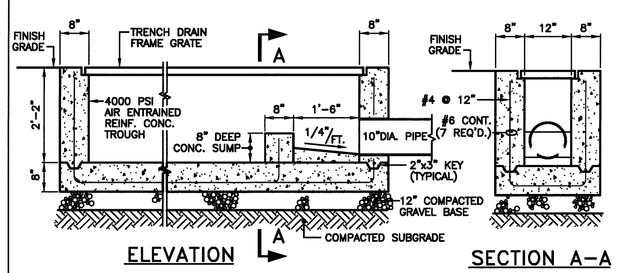

20 TRENCH DRAIN
N.T.S.

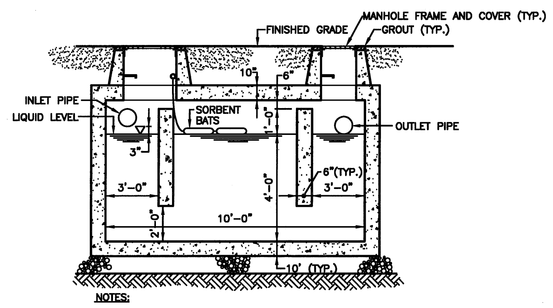

NOTES:
1. CONCRETE TO BE PRECAST PER ASTM OR CAST-IN-PLACE, H-20 LOAD. SUBMIT SHOP DRAWINGS.
2. SEPARATOR SHALL BE MANUFACTURED BY ROTONDO & SON. OR APPROVED EQUAL
3. SEPARATOR SHALL BE MODEL NO. ST5x10-2 (MODIFIED PRECAST SEPTIC TANK) OR APPROVED EQUAL

21 2,000 GALLON OIL/WATER SEPARATOR
N.T.S.

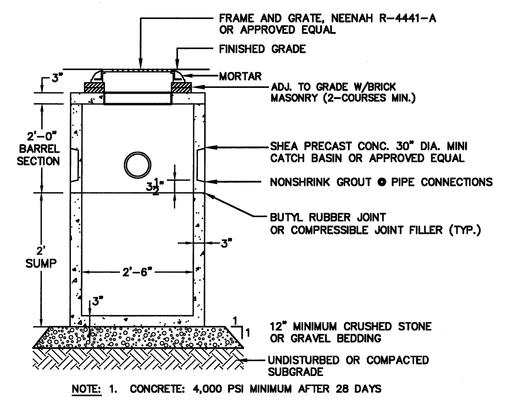

NOTE: 1. CONCRETE: 4,000 PSI MINIMUM AFTER 28 DAYS

22 AREA DRAIN
N.T.S.

SMMA
SYMMES MAINI & MCKEE ASSOCIATES
1000 Massachusetts Avenue
Cambridge, Massachusetts 02138
617.547.5400 Fax 617.354.5758

KLING STUBBINS
2961 Chestnut Street Philadelphia, Pennsylvania
P 215.599.2900
F 215.599.2901
W www.klingstubbins.com

OWNER REVIEW

NAME	DATE

NO.	DATE	DESCRIPTION
1	12/18/09	B200 SPECIAL PERMIT

ISSUE LOG
△ = CLOUDED CHANGE

PATRIOT PARTNERS

Lexington TECHNOLOGY PARK
200 Patriot Way
Lexington, Massachusetts

DETAILS I

SCALE	NTS
DRAWN BY	EF
CHECKED BY	
PROJ. ARCH. / ENGR.	JCH
PROJ. MGR.	BWL
JOB NO.	07044.00

© SYMMES, MAINI & MCKEE ASSOCIATES, INC. 2007

C6.1

P:\2009\09037\CADD\c\cs\09037C6.dwg 12/17/2009 7:36 PM